DIN MOUNT NO SOCKET RELAY & AC CURRENT SWITCH COMBO

RIBRXLCF-NS

Current Switch and Relay Combination, 10 Amp SPST-N/O, 10-30 Vac/dc Coil, Fixed, 0.25-10 Amp, No Socket Non-Pluggable Relay

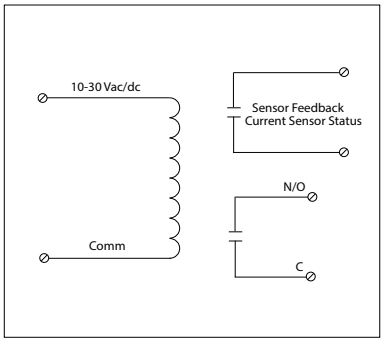

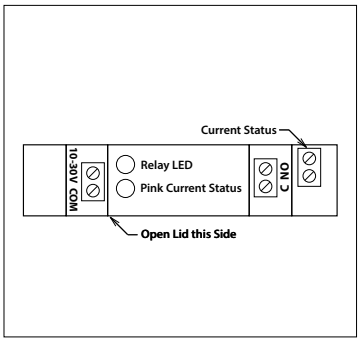

ADIN35ES
Pair of End Stops for 35mm DIN Rail

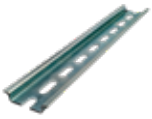

ADIN35
DIN Rail Perforated 35mm x 7.5mm x 1m

Models
ADIN35 and ADIN35ES sold separately. See data sheet on website for more product information.

SPECIFICATIONS

 # Relays & Contact Type: One (1) SPST Continuous Duty Coil
Expected Relay Life: 10 million cycles minimum mechanical
Operating Temperature: -30 to 140° F
Humidity Range: 5 to 95% (noncondensing)
Operate Time: 20ms
Relay Status: LED On = Activated
Dimensions: 2.76"H x 3.88"W x 0.78"D
Housing Detail: See **Housing K** in housing guide for dimensions
Origin: Made of US and non-US parts
Terminal Strip: 14-22 AWG wire
Approvals: UL Listed, UL916, C-UL, CE, RoHS
Gold Flash: Yes
Sensing Range: .25 - 10A
Accessories: ADIN35, ADIN35ES

Contact Ratings:
10 Amp Resistive @ 277 Vac
10 Amp Resistive @ 28 Vdc
480 VA Pilot Duty @ 240/277 Vac
480 VA Ballast @ 277 Vac
Not rated for Electronic Ballast
600 Watt Tungsten @ 120 Vac
1/3 HP @ 120-240 Vac
1/4 HP @ 277 Vac

Power and Control Voltage:
10-30 Vac/dc ; 50-60 Hz
Drop Out = 2.1 Vac / 2.8 Vdc
Pull In = 9 Vac / 10 Vdc

Coil Current:

33 mA @ 10 Vac	13 mA @ 10 Vdc
35 mA @ 12 Vac	15 mA @ 12 Vdc
46 mA @ 24 Vac	18 mA @ 24 Vdc
55 mA @ 30 Vac	20 mA @ 30 Vdc

Sensor Contact:
Solid State Contact
30Vac/dc, 0.1A Max.

- When current sensor status is off (open), leakage <30 uA @ 30Vac/dc
- When current sensor status is on (closed), voltage drop < .3 Vac/dc @ .1 Amp

DIN MOUNT NO SOCKET RELAY & AC CURRENT SWITCH COMBO

RIBRXLSA-NS

Current Switch and Relay Combination, 10 Amp SPST-N/O + Coil Side Override, 10-30 Vac/dc Coil, Fixed, 0.25-10 Amp, No Socket Non-Pluggable Relay

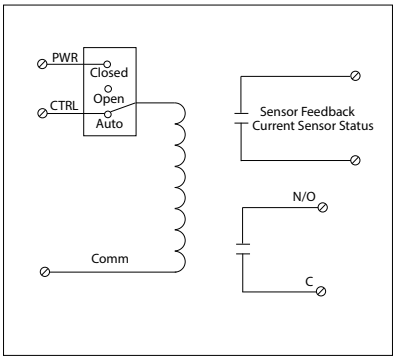

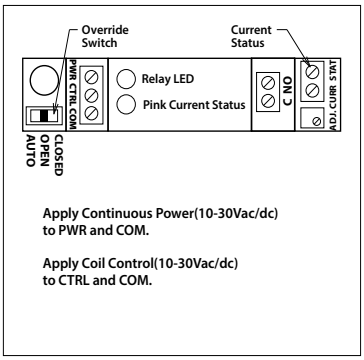

ADIN35ES
Pair of End Stops for 35mm DIN Rail

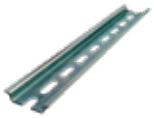

ADIN35
DIN Rail Perforated 35mm x 7.5mm x 1m

Models
ADIN35 and ADIN35ES sold separately. See data sheet on website for more product information.

SPECIFICATIONS

 # Relays & Contact Type: One (1) SPST Continuous Duty Coil
Expected Relay Life: 10 million cycles minimum mechanical
Operating Temperature: -30 to 140° F
Humidity Range: 5 to 95% (noncondensing)
Operate Time: 20ms
Relay Status: LED On = Activated
Dimensions: 2.76"H x 3.88"W x 0.78"D
Housing Detail: See **Housing K** in housing guide for dimensions
Origin: Made of US and non-US parts
Terminal Strip: 14-22 AWG wire
Approvals: UL Listed, UL916, C-UL, CE, RoHS
Gold Flash: Yes
Sensing Range: .25 - 10A
Accessories: ADIN35, ADIN35ES

Contact Ratings:
10 Amp Resistive @ 277 Vac
10 Amp Resistive @ 28 Vdc
480 VA Pilot Duty @ 240/277 Vac
480 VA Ballast @ 277 Vac
Not rated for Electronic Ballast
600 Watt Tungsten @ 120 Vac
1/3 HP @ 120-240 Vac
1/4 HP @ 277 Vac

Power and Control Voltage:
10-30 Vac/dc ; 50-60 Hz
Drop Out = 2.1 Vac / 2.8 Vdc
Pull In = 9 Vac / 10 Vdc

Coil Current:

33 mA @ 10 Vac	13 mA @ 10 Vdc
35 mA @ 12 Vac	15 mA @ 12 Vdc
46 mA @ 24 Vac	18 mA @ 24 Vdc
55 mA @ 30 Vac	20 mA @ 30 Vdc

Sensor Contact:
Solid State Contact
30Vac/dc, 0.1A Max.

- When current sensor status is off (open), leakage <30 uA @ 30Vac/dc
- When current sensor status is on (closed), voltage drop < .3 Vac/dc @ .1 Amp